SPACE CHAIN

COMMUNITY-BASED SPACE PLATFORM

Space Exploration Program
Based On Human Consensus

VERSION 1.2

Mission Statement

SpaceChain has created a solutions-oriented platform to tackle humankind's greatest challenges. With the increasing complexity and difficulty of global challenges, we must harness distributed intelligence to pinpoint comprehensive and viable solutions. SpaceChain provides an open-source problem solving model that optimizes collective intelligence. SpaceChain establishes conditions that incentivizes the community of its users, contributors, and developers to strengthen the ecosystem.

SpaceChain advances human progression in three areas:

I. Initiate the utilization of space to better serve businesses and consumers.

II. Enhance the accessibility to space industrialization and technologies.

III. Accelerate the adoption of space utilization and democratization.

The SpaceChain team is led by Zee Zheng as CEO, and former Bitcoin core developer and blockchain pioneer Jeff Garzik as CTO.

Abstract

SpaceChain aims to pioneer solutions for humanity to thrive in the coming space age. Through combining blockchain technology with current astronautical resources and capabilities, SpaceChain inspires people to become an integral part of the space revolution through its community and network built to advance the progression of space technologies as a collective and unified whole.

SpaceChain is a community-based space platform with an open network driven by collaboration and transparency through blockchain technology implementation. Upholding the principles of true decentralization and international collaboration within a vibrant global community, SpaceChain leverages the dynamics of tokens and private funding to accelerate space development.

SpaceChain was founded in 2017 and has completed the development of the SpaceChain Operating System (SpaceChain OS). SpaceChain OS has been successfully adapted to the Sparc V8 satellite operating system and has achieved stable operations at the system level. SpaceChain OS integrates Qtum blockchain technology and has established a platform for the development of space-based applications. In February 2018, SpaceChain released and launched its first SpaceChain OS blockchain node into space.

Through harnessing the power of tokenization, private funding and leadership, SpaceChain provides an open-source platform for innovators around the world to maintain an opportunity to choose and execute projects that fit the blockchain-based philosophy to accelerate outer space development.

PART 1: INTRODUCTION

The Value of Blockchain & Space Technology

1.1 The Importance of Internet Technology Innovation: Blockchain

Blockchain is a computer programming breakthrough that solved the Byzantine Generals problem, also known as the Byzantine fault tolerance and an "error avalanche." This concept was a generalized "unsolvable" proof that led to roadblocks in software development. Historically, there was a necessity for a third party that demanded a payment to perform transactions or submit information to ensure the accuracy of transactions and create a reliable history. Blockchain eradicates the need for an intermediary through creating a trustless medium of exchange and immutable public ledger. It creates a secure and resilient shared history which is accessible anywhere in the world. Bitcoin is the first real-world application of blockchain. Blockchain goes beyond cryptocurrency, allowing us to program transactions and signals that allow for a decentralized, self-governing network without the need for an intermediary through enforcing executable contracts between machines entitled "smart contracts."

New technologies seem to emerge unexpectedly from "out of the blue," however, it is due to the culmination of decades of intense research and development by near-anonymous collaborators. Societies that encounter these groundbreaking technologies when it arrives at the stage for mass adoption are divided into two sectors: I) idealists who cite it as proof of a revolution; or II) establishmentarians whose very model is threatened by the technology, therefore, attempting to diminish it with disregard and disdain. A small subset of society trained in technology develops, discusses, and explores its capabilities, further improving upon its vulnerabilities and weaknesses, strengthening the sustainability and adaption of the technology until it evolves into something that is irrefutable. At this stage, commercial interests spark, seeking new innovative ways to conduct business which in turn leads to the intervention of commerce, mainstream production and revolutionary technology. Next is the proceeding of profound changes within commerce and culture. This evolutionary arc has characterized technologies from the printing press in 1440, personal computing in 1975, the Internet in 1993 and most recently, blockchain in 2008.

Blockchain has received its share of media coverage in recent years and has captured the interest of technologists and economists since 2008. It solved the "avalanche of errors" that the open Internet presented where otherwise unrelated parties interact over an untrusted network. For the first time, information such as digital signatures, digital contracts, digital keys to physical locks, digital ownership of physical assets like real estate and digital currency could be validated in a matter of minutes between untrusted parties in a peer to peer transaction without the necessity of a third party intermediary ensuring the validity of ownership and authorization. Once a transaction is completed on a blockchain, it is final. Blockchains represent the Internet-wide distributed ledger (or shared history) and server for both information and commerce that cannot be modified, edited or tampered with (also known as immutable). Blockchain is the first true community powered super computer. Blockchain can power smart contracts, transacting complex legal, commercial, and cultural interactions in a trustless, peer to peer manner, deeming third party intermediaries obsolete, and enabling execution among machines such as computers, sensors, and nodes, or systems such as grids.

1.2 Brief History of Telecommunication & Internet Evolution

The future is here, now it is up to us to equally distribute the keys that grant access to a realm of endless possibilities.

A brief history of the Internet and discussion of the evolution of blockchain reveals a true revolution in our capabilities to understand, explore our world and ultimately advance our species through technology. The merging of the Internet and the computer was a leap forward in our capacity as a species. Combining worldwide broadcasting, instant information dissemination, and platforms for collaboration without having to be in a specific geographic location has opened new avenues for advancing a more transparent and collaborative world, where breakthroughs can benefit all of humanity. As with many revolutionary technologies, Blockchain has evolved into a social movement, a philosophy and ethos with pure decentralization at its core, adhering to the principles of accuracy, trust, transparency, legitimacy, immutability and validation. It is currently disrupting industries run on inefficient and outdated systems that are no longer sustainable.

In the context of our global telecommunications evolution, the Internet represents the most successful example of a sustainable worldwide collaborative and decentralized development of information infrastructure. Blockchain, originated from Satoshi Nakamoto's whitepaper, represents how the economic collaborative component is driving Internet evolution. The decentralized Internet today has become the widespread information and economic infrastructure forming the true initial prototype of what has been called the National Galactic Information Infrastructure. As with J.C.R. Licklider, a computer scientist, psychologist and MIT graduate who wrote in his historic memo in 1963 discussing the concept of an "Intergalactic Computer Network" through which anyone at any location could access and change data and programs, so too did Satoshi Nakamoto envision an absolute "peer-to-peer version of electronic cash" that would "allow any one party" to send value to any second party without a third party intermediary on a series of computers running software called nodes. Together with the communication protocol, advances in computer programming on blockchain combined with smart contracts executed by Qtum Foundation (Qtum), there is finally a way to fully transform entire industries.

SpaceChain is advancing the evolution of the decentralized Internet to the next level by essentially inventing truly decentralized multi-tenant software capabilities within a satellite constellation system network. SpaceChain has built a universal OS that can be used across any satellite to transform satellites into multi-use computers rather than the single use satellites that are prevalent today.

1.3 Technical Platforms Have Led to the Era of Decentralized Space Tech

Currently the international space industry has two prevailing problems that hinder the development of this industry as a whole:

I. Security issues, which mainly exists between nations; and

II. Conflicts of interests between commercial corporations and state-owned companies.

The first issue is being addressed by diplomacy and cooperation encouraged by leaders and communities through collaboration and open-source technology. SpaceChain addresses the second issue. Space technologies have historically been inaccessible and highly guarded. The problem is that it is difficult for new businesses to utilize existing infrastructures and access knowledge outside of the organization, and for nations to audit projects. Businesses have also avoided space technologies due to the high capital requirement. Unlike other software, it is not possible to build space-based applications with inadequate sums of capital. Lack of human capital, specialized professionals and limited talent are also major constraints.

Current space projects are dominated by governments, and thus, hindered by external factors that make them inefficient. Research and innovation are often times under-resourced. Commercialized space projects like SpaceX deserve more attention and are receiving high valuations from very modest upfront investments.

At the dawn of the Internet age, startups greatly benefited from the traditional venture capital model. Typically, a business is owned by key members of the company and shareholders who work within the company provide contributions. Innovation and creativity contributed by entrepreneurs within the technology field thrived and succeeded due to the support of venture capital. However, for companies that require additional time and larger initial outlays for research and development (R&D) such as space exploration, the traditional VC model is not necessarily the best option. Many technologies based on the VC model would be deemed inefficient because they require additional time and capital investment to succeed and reach markets to thrive.

For example, traditional satellite research and development cycles may proceed for many decades. Once the funding for research is ready, it takes months to complete research and development before teams can apply for additional funding for the next stages to get technologies released onto the market. These projects spend five years stuck within this cycle only to have their satellite prototype unable to launch.

SpaceChain is a community-based space platform that partners with other organizations. SpaceChain's decentralized application platform built on satellite technology has opened up this industry to the public. SpaceChain promotes SpaceChain OS to traditional space industry satellite systems such as communication and navigation. Also, SpaceChain promotes the SpaceChain verification system to better aggregate and utilize current space resources in an open source, audited and secure system. SpaceChain OS can be used by different satellites and organizations wherever they are located in the world.

1.4 Introducing SpaceChain

SpaceChain establishes a network infrastructure that is very much like the public telecommunication infrastructure shared globally. This network infrastructure will not involve military or government bodies, but rather the general public, private entities and organizations. Entities can access, build, and interact upon and within the network, as with the Internet. SpaceChain's application is similar to a mobile application development platform. With blockchain software, SpaceChain provides an application sandbox or firewall so that independent apps may be uploaded to the satellite, similar to apps on a mobile application layer. Until now, inter-satellite links (satellite to satellite communications) present a fundamental hurdle to a decentralized mesh network. In order to have a resilient mesh network, there first needs to be satellite-to-satellite communication that is blockchain based.

There remains security issues related to commercial satellites such as data integrity and safety of the satellite. SpaceChain invented SpaceChain OS, a sandboxed blockchain technology that is built upon SylixOS (an open-source real-time operating system) and Qtum. This system ensures the safety of data running on the satellite as the programs are operated within the immutable public blockchain layer.

SpaceChain OS is designed to enhance hardware capability while maintaining security. SpaceChain OS maintains the capability to adapt to global hardware systems and cater to varying satellite technologies. In order to ensure the safety features and functions of SpaceChain OS, the foundation carefully evaluated each generation of SpaceChain OS through in-orbit testing to provide the community with reliable open-source code and results. Internally, SpaceChain's token model equalizes and optimizes the use of available technology and resources, providing the space industry with an efficient and reliable consensus on value and collaboration.

Since it was established in 2017, SpaceChain has already provided solutions in the space frontier. SpaceChain OS development, infrastructure design and operating system began in November 2017. SpaceChain OS has been successfully adapted to Sparc V8 satellite operating system, achieving stable operation at the micro-system level. The migration from Qtum blockchain technology has achieved basic sandbox function and the EVM Virtual Machine has been developed.

PART 2: PATH

Realizing the Value of Blockchain Technology

2.1 General Overview of the SpaceChain Structure

2.1.1 Milestones:

- 2018 February: Completed development of blockchain space node and launched node in space
- 2018 March: Completed development of SpaceChain OS
- 2018 March: Open-sourced the SpaceChain OS codes on GitHub
- 2018 April: Completed operating system migration from the Zynq hardware system

SpaceChain has integrated blockchain nodes on satellites to add a new dimension to the core framework of distributed ledgers. SpaceChain's node satellites situates blockchain in space and makes use of existing space technology to build a worldwide distributed application layer. SpaceChain pioneers a new layer of infrastructure for the Internet of blockchains by taking advantage of space resources. SpaceChain's platform features data collection, computing, applications and storage. SpaceChain uses satellites as its operational nodes for realizing direct on-satellite data processing and secures in-space data storage through cryptographic technologies such as quantum communications. Individuals throughout the world have access to this layer of infrastructure, just as they do with the Internet wherever they are located within their various devices.

SpaceChain brings satellite technology beyond a repeater model (RM) and its partners provide better language than traditional RM, which essentially describes how most current satellites function. They usually take a signal from the ground and broadcast live satellite tv, provide GPS or one function at a time. RM allows for a minimal amount of data processing to take place on the satellite. SpaceChain's system changes this model to one that provides multi-tenancy with flexible software capabilities. Most satellites are owned and operated by a single entity, thus reducing them to a single-tenancy. With SpaceChain combining existing space technology and blockchain, for the first time, they created multi-tenancy as a new user model and a new economic model for satellites.

Additionally, SpaceChain created a system to reduce the cost of space applications, allowing teams and investors to conduct additional development with their capital. SpaceChain combines the most cost-efficient rocket launches globally with multiple payoffs per rocket. As additional affordable spacecrafts reach orbit, they allow partners and other individuals and companies to launch many redundant nodes within the network globally. Thus, their network also self-heals. SpaceChain will observe a mesh network in space of many satellites where loss and replacement will enable the network to be low cost and resilient within a “many plus affordable” model. SpaceChain employs a communication protocol to projects they undertake in space, including asteroids or planetary bodies exploration where they can send remote drones powered by applications run on satellites surrounding celestial bodies in the planetary system. Hardware design also involves internal redundancies, especially as spacecrafts utilizing their ‘smart’ satellites will have redundancy of computing.

Figure of Overall SpaceChain OS Structure:

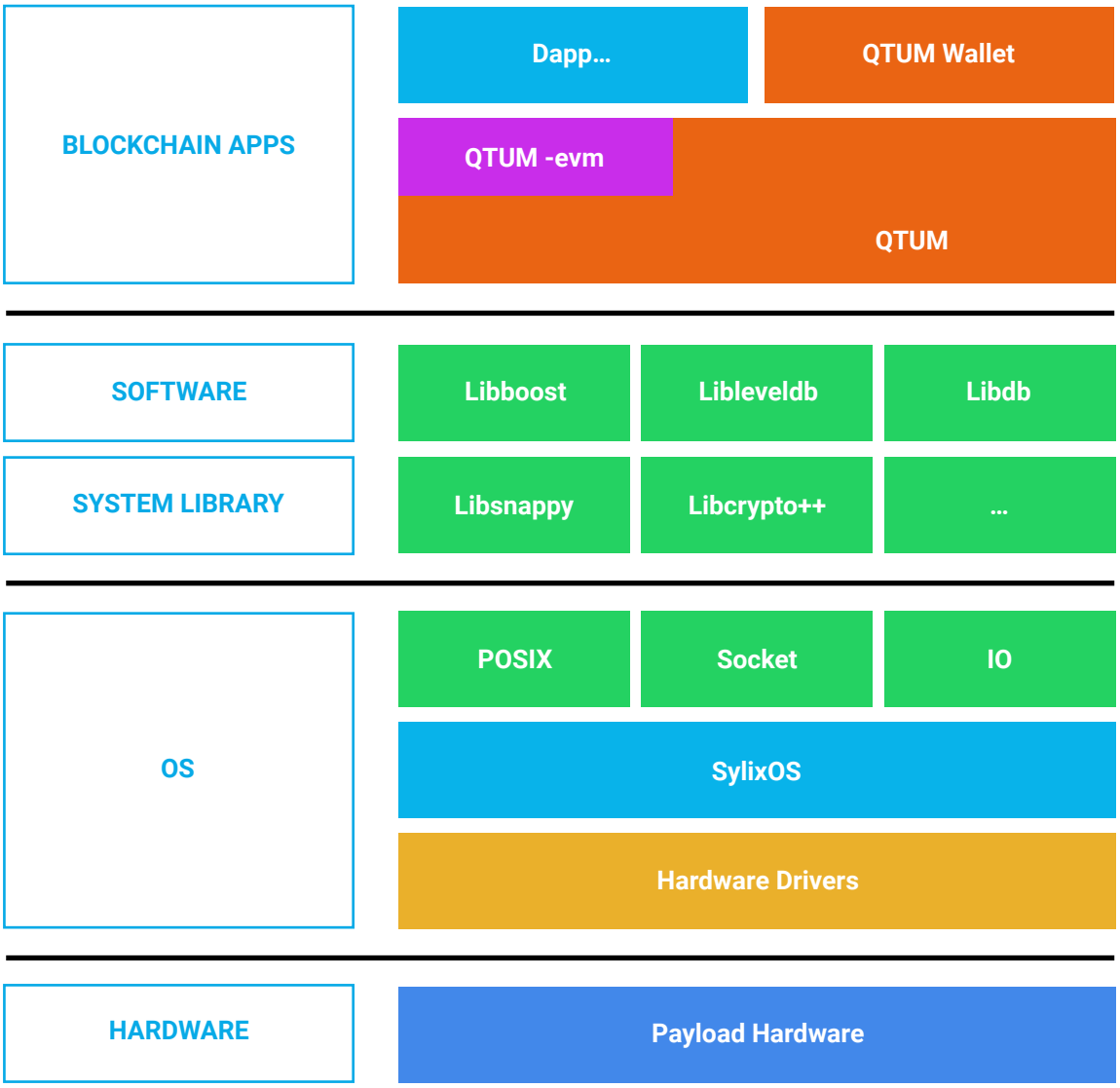

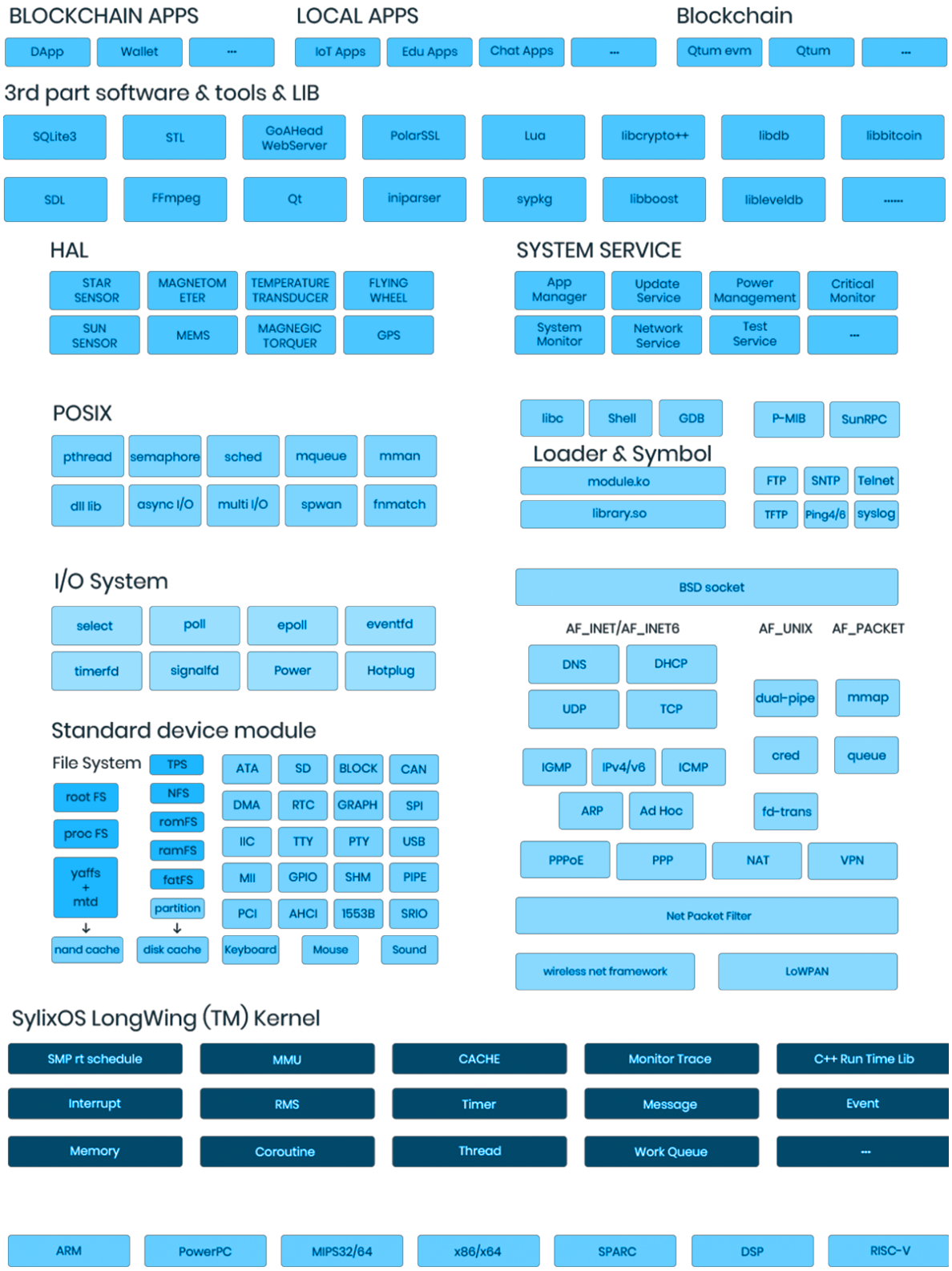
BLOCKCHAIN APPS
DApp
Wallet
...
LOCAL APPS
IoT Apps
Edu Apps
Chat Apps
...
Blockchain
Qtum evm
Qtum
...
3rd part software & tools & LIB
SQLite3
STL
GoAHead WebServer
PolarSSL
Lua
libcrypto++
libdb
libbitcoin
SDL
FFmpeg
Qt
iniparser
sypkg
libboost
libleveldb
.....
HAL
STAR SENSOR
MAGNETOMETER
TEMPERATURE TRANSDUCER
FLYING WHEEL
SUN SENSOR
MEMS
MAGNEGIC TORQUER
GPS
SYSTEM SERVICE
App Manager
Update Service
Power Management
Critical Monitor
System Monitor
Network Service
Test Service
...
POSIX
pthread
semaphore
sched
mqueue
mman
dll lib
async I/O
multi I/O
spwan
fnmatch
libc
Shell
GDB
P-MIB
SunRPC
Loader & Symbol
module.ko
library.so
FTP
SNTP
Telnet
TFTP
Ping4/6
syslog
I/O System
select
poll
epoll
eventfd
timerfd
signalfd
Power
Hotplug
BSD socket
AF_INET/AF_INET6
AF_UNIX
AF_PACKET
DNS
DHCP
UDP
TCP
dual-pipe
mmap
cred
queue
IGMP
IPv4/v6
ICMP
ARP
Ad Hoc
fd-trans
PPPoE
PPP
NAT
VPN
Net Packet Filter
wireless net framework
LoWPAN
Standard device module
File System
TPS
NFS
romFS
ramFS
fatFS
partition
root FS
proc FS
yaffs + mtd
nand cache
disk cache
ATA
SD
BLOCK
CAN
DMA
RTC
GRAPH
SPI
IIC
TTY
PTY
USB
MII
GPIO
SHM
PIPE
PCI
AHCI
1553B
SRIO
Keyboard
Mouse
Sound
SylixOS LongWing (TM) Kernel
SMP rt schedule
MMU
CACHE
Monitor Trace
C++ Run Time Lib
Interrupt
RMS
Timer
Message
Event
Memory
Coroutine
Thread
Work Queue
...
ARM
PowerPC
MIPS32/64
x86/x64
SPARC
DSP
RISC-V

2.2 The Hardware of SpaceChain: Future of Internet Infrastructure

What follows is a technical breakdown of SpaceChain from both the hardware and software perspectives.

The key function of the blockchain payload is processing applications securely on the satellite. To achieve this goal, the payload uses SpaceChain OS to provide the software environment to applications. The blockchain sandbox provides a safe environment and a high-performance chip to guarantee all the software above. The main logic structure is shown below.

The beta version payload hardware is on-board CPU and FPGA.

The payload provides a powerful processing module for Blockchain applications and OS.

The module contains several main parts:

- A very powerful ARM/FPGA on-board computer (OBC) designed as an efficient system for space application
- The power system is divided into two sections: I. for ARM and II. for FPGA
- Dual ARM Cortex A9 MPCore up to 800 MHz
- 1GB DDR3 RAM/4 GB storage
- Powerful FPGA module – 125K logic cells
- Precision milled anodized aluminum heat sink to control thermal load and provide EMI shielding
- Operational temperature: -40°C to +60°C
- PCB material: 22 layer glass/polyimide
- IPC-A-610 Class 3 assembly

In the future, blockchain payload will continue to be upgraded to meet the future demand of blockchain applications. However, the existing processors have different problems that will slow down the update rate. For example:

- x86 is complex and not open source, the internal structure of the processor is not clear, and there may be a back door that is unable to be safely controlled
- ARM has expensive intellectual property costs that will reduce user numbers
- SPARC is product of commercial companies; whole technical system has long-term sustained support risk
- MIPS and Power belongs to commercial companies which are focused on making profits, and their business model may not promote democratization of technology. It is common to have conflicts of interests with upstream and downstream companies; it may lack good industrial chain ecological support

To satisfy the update rate of blockchain payload, there needed to be an open source processor project. In 2010, David Patterson, a distinguished professor at UC Berkeley, launched the RISC-V processor open-source project, showcasing great properties such as:

- Free authorization; no patent barriers exist
- Permanent non-profit foundation to cooperation management

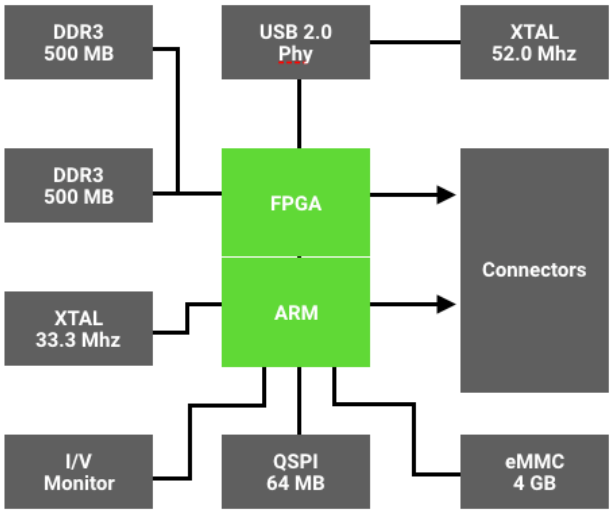

- Complete alliance of upstream and downstream industry
- Bi-annual international workshop meetings

At present, there are 50 core member companies, 270 companies and 29 universities participating in the RISC-V open-source project. SpaceChain is upgrading its blockchain payload processor under the open source RISC-V ISA (Instruction-Set Architecture) to run on its OS. The blockchain payload will be updated in performance and reliability.

Functional Description:

Microcontroller	The OBC is based on a Zynq-7000 All Programmable SoC (AP SoC) devices integrate the software programmability of an ARM-based processor with the hardware programmability of an FPGA, enabling key analytics and hardware acceleration while integrating CPU, DSP and mixed signal functionality on a single device.
OS	The OBC has a default SpaceChain OS installed.
I2C Interface	OBC has an I2C bus supporting bidirectional data transfer between masters and slaves, multi-master bus, arbitration between simultaneously transmitting masters without corruption of serial data on the bus. Serial clock synchronization allows devices with different bit rates to communicate via one serial bus and is used as a handshake mechanism to suspend and resume serial transfer.
CAN Interface	One of the main interfaces of the OBC to communicate with other subsystem hardware is a Controller Area Network (CAN) bus interface. It is a serial communications protocol that supports distributed real-time control with a high level of security.

2.2.1 Intelligent Satellites

SpaceChain has launched a **LEO** satellite into space to establish the satellite network and a satellite application platform. Partners, individuals and companies can launch their own LEO satellite into space with SpaceChain OS pre-installed. The satellite's basic characteristics are shown below:

Characteristics	Parameters
Weight	10-100 kg
Power	≤ 200W
Life Time	5 years in orbit
Payload	≥ 20 kg ≤ 100W
Orbit Height	500 - 2000 km

Satellites will have two parts: **I. platform;** and **II. payloads**. The platform is responsible for supporting the payload in space and the payload works to realize all the defined functions.

Satellite Platform:

Constitutes	Functions
Main Structure & Mechanism	Mechanic support for all the equipment
Integrated Management Unit	Processing attitude/orbit/thermal control program to maintain the attitude/orbit state of satellite to ensure it points to appointed place and the temperature of all the equipment in a limit section
Sensors	Collect key data to support attitude/orbit/thermal control program; provide necessary data to payload
Actuators	Execute the order from attitude/orbit/thermal control program
Solar Panel & Battery System	Provide electricity power to all the equipment and payload
TT&C System	Send monitoring data and remote sensing data to ground station, and receive and execute the order from ground station

Payload	Constitutes	Functions
Blockchain Payload	High Performance Chip (PSOC)	Provide enough calculate ability to support OS and apps
	Memories	Data storage / software code storage / Blockchain account book storage
	Open source operation system	Provide an OS to support all the applications and smart contracts.
Communication Payload	Satellite user terminal communication payload and antenna	Bi-direction communication with user terminal
	Inter-satellite communication payload and antenna	Real time communication
	Satellite-ground station communication payload and antenna	Data transmission to ground station, OS update/applications update.

Structure & Mechanism

The basic purpose of structure and mechanism design is to contain all the equipment, to guarantee the satellite's function and to satisfy the installation demands of the equipment. This provides a safe internal environment during rocket launch. All of these purposes must be satisfied in limit space and limit weight.

Integrated Management Unit (IMU)

The integrated management unit is the core of the satellite control components, responsible for coordination and control of all equipment to realize TT&C function, attitude/orbit control, auxiliary management of payload and information management. Its main functions include:

I. **TT&C:** It receives the data directly from TT&C transponder and executive orders, sends telemetry data directly to the transponder to send down to ground station;

II. **Attitude/Orbit Control:** Collect data of all attitude sensors, and perform attitude/orbit control program, control attitude/orbit actuator;

III. **Auxiliary Management of Payload:** Receives data and order from ground station to control Blockchain payload; control the communication payloads;

IV. **Information Management:** Collect and process the whole satellite's data, including attitude/orbit information, location information, parameter and state of each part, and send it to TT&C transponder.

The main parts of IMU and their functions show below:

Name	Functions
OBC	Attitude/orbit control calculation, data management, provide analog AD/DA interface, the state acquisition interface and the command output interface, temperature acquisition, analog quantity acquisition and instruction driver output; provide power control output interface and implement active temperature control of thermal control unit
Command and Telemetry Processing Module	Realize TT&C communication, data interaction with OBC, direct instruction and decryption function of upstream and downstream band
Secondary Electric Power Supply System	Receive premier power supply and generate the secondary power required by the DC/DC module
Data Storage & Interface Board	Provide the data input and output interface of sensors and actuators; data storage and playback, software and operating system recovery

All the IMU software is modularized and developed based on SpaceChain OS. SpaceChain OS strengthens the operating system of the satellite platform. The main structure and their functions are:

Name	Functions
Housekeeping Module	Module is responsible for: Management of application software according to the different stages of system functions and working mode, the software of the ground reconstruction instruction (by injection) for scheduling management, to complete satellite task for different stages. Parameter setting and mode conversion. Payload control according to ground instructions.
Fault detection and processing module	Monitoring of other software, and when the task software is abnormal, it can be detected and handled.
Orbital processing module	Receiving the orbital data, selecting the orbital data source, processing and extrapolating the orbital data to the Attitude/Orbit control software. Orbital data sources: GPS track data and ground injection track data. Module is responsible for: • GPS data analysis • Orbital mode selection • GPS mode processing • Injection mode processing • Fault mode processing

Attitude/orbit control module	The Attitude/orbit control module is used to ensure the attitude orientation and orbit position to meet the mission requirements. Module is responsible for: • Determine the working mode • Analysis and pretreatment of sensor measurement information • According to the work mode of attitude control, choose the proper attitude/orbit control algorithm • Call the correct control algorithm to generate control instructions and output • Adjust the attitude/orbit according to the ground rail control plan • Realize basic system fault handling
TT&C module	Telemetry module's task is as follows: collect, framing, storage, sending real-time satellite sensing information frame and delayed remote sensing information frame, manage TT&C transporter according to the measurement and control ephemeris and work mode of information, and to send telemetry data in the measurement and control segment.
	Tele control module is responsible for the receiving, resolving and processing of the upward data (including the indirect remote control command and injection data).

Sensors:

Sensors	Data type	Functions
Gyroscope	Angle °	Attitude information
Magnetometer	Magnetic intensity T/GS	Magnetic field information
GNSS	Position	Satellite position
Star sensor	Star direction	Reference system
Sun sensor	Sun direction	Reference system
Thermal sensor	Temperature	Thermal control input

This data could also be read by any application processing on blockchain payload of the satellite.

Actuators

Actuators	Data type	Functions
Momentum wheel	Moment	Change attitude
Magnetorquer	Magnetic induction force	Change attitude
Propulsion	Propulsion force	Change orbit
Thermal control	Heat flux	Thermal control

To secure the satellite, access to all of these actuators by applications developed by non SpaceChain team are forbidden.

Solar Panel and Battery System

Main part	Function	Parameters
Solar panel	Photovoltaic conversion, recharge battery	Triple junction GaAs space solar cells
Battery	Energy conservation	Lithium/60Wh
ACU	Array condition	6PV input channels, rate 2A
PDU	Power distribution	9 output channels

To secure the satellite, access to all of these power supplies by applications developed by non SpaceChain team are forbidden.

TT&C system

TT&C system contains two parts: I. Transceiver Machine; and II. Antenna. The main parameter shows below:

Characteristics	Frequency	Modulation
Up	VHF	AFSK
Down	UHF	BPSK

Entire Satellite Mechanism

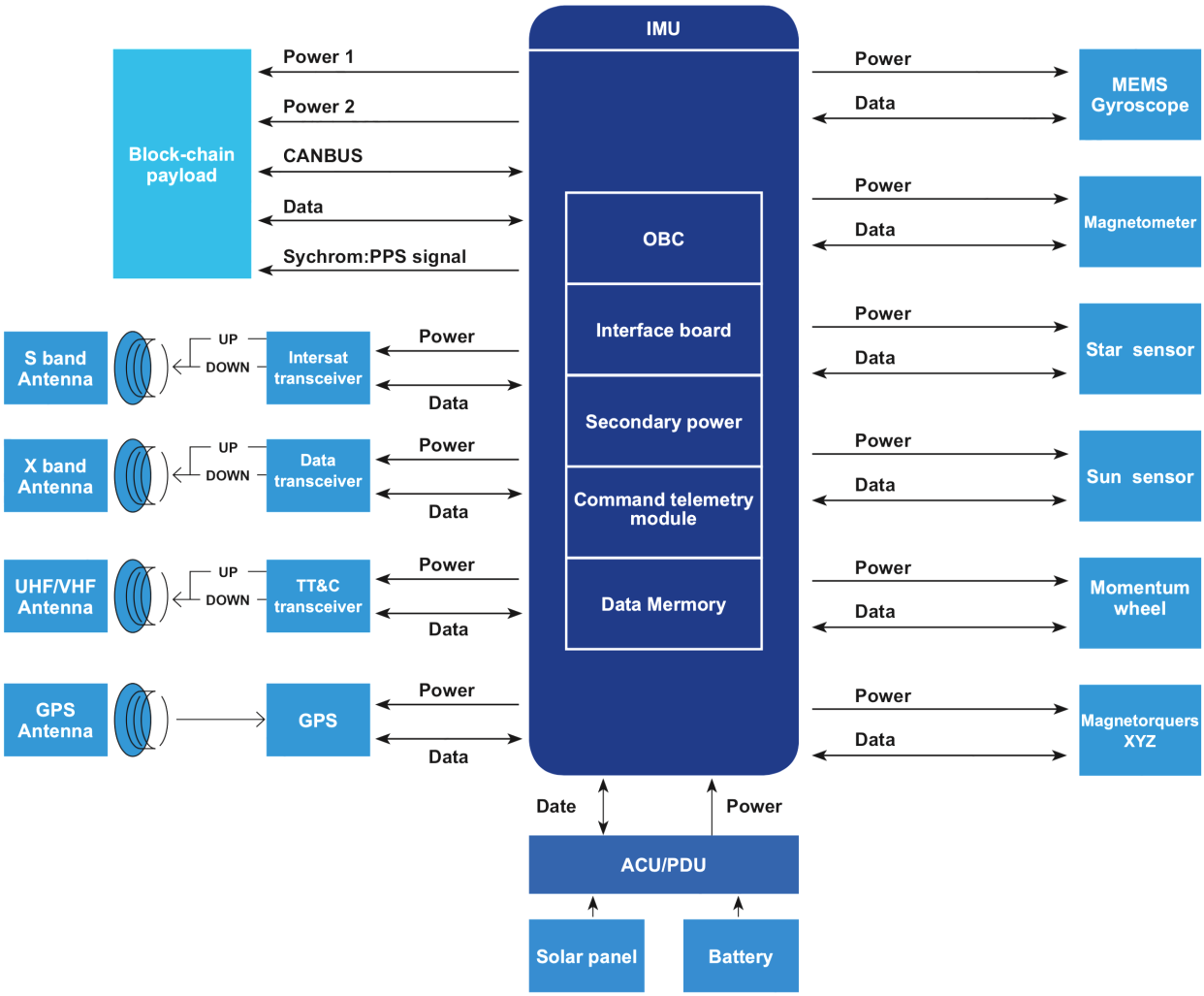

2.2.2 Mesh Networks and Satellite Installations

The SpaceChain satellite system contains five parts: **satellites, ground station, user terminal, cloud services and core network.**

All these five parts take charge of its own functions:

Satellites:

- Bi-direction communication with user terminal
- Data transmission to ground station, data update\TT&C from ground station
- Inter-satellite communication makes the whole system real-time
- Processing normal/blockchain applications
- Processing smart contracts at ground station
- Receive data from constellation and send them to cloud service
- Transmit OS update code/application code to satellites
- TT&C job

User Terminals:

- Interface between the SpaceChain system and the end user
- Execute user's command/receive data which user demand
- Processing normal/Blockchain applications and also smart contracts
- User can be human/animal/vehicle/machine/plant etc. (anyone or anything who needs and wants this network)

Cloud Service:

- Mass data processing
- Decentralized cooperative work

Core Network:

- Link all the ground stations
- Link the SpaceChain network to other networks (caber\cellular networks etc.)

Ground Station:

The ground station is responsible for the feeder link between satellites, user terminal management, channel management and operation control; as well as the operation management of maintenance system. The ground station includes the TT&C system and operation control system.

1) Operation Control System:

The operation control system includes: data acquisition gateway station, data acquisition center, user terminal management and user service system. The system is responsible for the preparation of satellite mission plan, completing the dispatching management of the user terminal which is responsible for monitoring the satellite. This system is also responsible for receiving, processing and distributing the user terminal data.

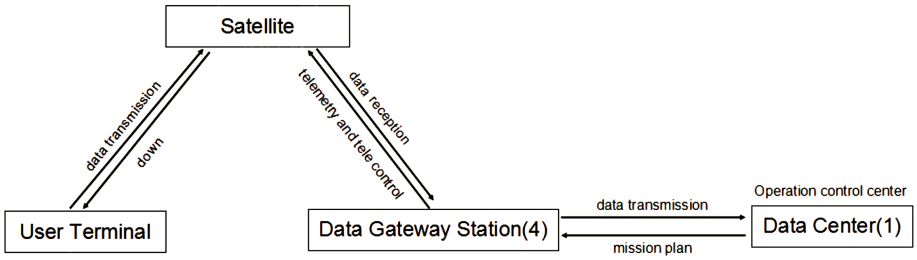

2) TT&C System:

The TT&C system combines VHF/UHF frequency measurement and GPS/BD - 2 auxiliary communication protocol, isolating up/down link by TDD, using rod form as TT&C antenna, realizing auxiliary orbit measurement by GPS/BD antenna and receiver.

3) User terminal

The User terminal is the interface between the SpaceChain system and the end user. It can execute user's commands and receive data which users demand and process applications and smart contracts. The user can be human, animal, vehicle, machine or plant etc.

Cloud Service & Core Network:

Main Parts	Responsibilities	Description
Cloud Service	- Data processing - Data base	Using Blockchain technology to realise a decentralised cloud service
Core Network	- Link of ground stations - Link SpaceChain system to the other communication system	Make the SpaceChain system a whole network and to be an interface between other network system, like cellular network / cable network etc.

2.2.3 Qtum & SylixOS: SpaceChain OS

SpaceChain will provide support for startups in the space industry in terms of technology, resources and human capital. At the same time, these startups can use SpaceChain's verification system, so they can quickly commercialize and produce products and services that society can benefit from on a global scale.

The most effective solution to alleviate the expense problem will be to encourage cooperation between companies while also significantly increasing the usage rate per satellite. Similar to how the mobile phone industry was revolutionized when Apple introduced the iPhone with its exceptionally user-friendly iOS, SpaceChain introduces a universal space iOS for space software development prepped for mainstream adoption. The space industry needs a stable and versatile operating system, and SpaceChain OS is that solution.

Developers can create applications using the environment provided by SpaceChain OS. SpaceChain OS significantly reduces the difficulty of developing space applications while putting resources like infrastructure to best use. Additionally, SpaceChain OS deployed sandbox technology ensuring an interference-free environment for the applications.

Our introduction of SpaceChain OS powered smart satellite system lowers application development costs. The SpaceChain Foundation allows their partners to launch into space customized LEO satellites each equipped with communication, camera, sensor, gesture and orbit control functions. Smart satellite hardware standards and the standardized production of satellite parts drastically reduce the cost of producing a satellite to spur organic growth of the industry. This ensures an economically viable ecosystem.

SpaceChain SDK for SpaceChain OS simplifies the development process and provides a modular development environment that is similar to Java Script. By being fully open-sourced, it encourages people to join the SpaceChain network, thus creating a vibrant development community. Tutorials for software development, and space hardware developer boards are available for people to develop and test applications based on satellite-technology.

SpaceChain has secured partnerships with well-known universities through lab establishment, research, open courses, technical forums and other educational resources. The SpaceChain Foundation continues to offer free resources for universities to participate in this exciting journey by providing free developer boards, hosting hackathons, and community development on SpaceChain OS globally. The SpaceChain Foundation wishes that more resources will be attracted into the space industry and more people will join the monumental adventure of space exploration.

SylixOS is an open source RTOS (Real-Time Operating System) project. SylixOS has been applied widely in various fields such as defense and security, aeronautics and astronautics, high speed railway system, smart grid, industrial automation, and motion control etc. Within the SpaceChain project, SylixOS is used in the satellite platform to manage hardware resources, and in the Blockchain payload to provide standard API interface and various system features for applications.

PART 3

Tokenomics and Blockchain Structure of SpaceChain

3.1 SpaceChain Bottom Layer: Qtum

The SpaceChain OS framework is divided into a blockchain application layer that includes these layers:

- Qtum provides the basic service API for smart contracts and blockchain application
- Qtum also offers a sandbox to guarantee the safety of applications processing
- Compatible for Ethereum protocol (ETH) Ethereum EVM to process Qtum smart contracts
- Open for any public blockchain and their smart contracts application

SpaceChain requires a blockchain infrastructure with low power consumption, high stability and strong expansibility. Qtum uses a PoS (proof-of-stake) consensus mechanism whereas most other blockchain technologies widely use PoW (proof-of-work) such as the Bitcoin blockchain and Ethereum protocol. PoW has high requirements for energy and hardware resources to function efficiently so it is not suitable for satellite systems.

Qtum has fully absorbed the accumulation of both the Bitcoin blockchain and the Ethereum protocol. Thus, Qtum technology has advantages in areas from code stability to third party support. In addition, Qtum uses UTXO technology to increase the network expansibility so that it can support a simple payment protocol SPV and the Lightning Network, and fully support the EVM smart contracts as well. Hence, Qtum meets all the demands necessary to effectively operate blockchain technology on satellites. SpaceChain selected Qtum from the beginning after conducting a complete technical assessment of both hardware and software necessity for space technology development. In addition to the above reasons, Qtum has many unique innovations. Qtum is the first smart contracts platform based on UTXO and MPoS. It has pioneered the integration of the advantages of both BTC and ETH ecosystem. It has proposed and implemented the following core technology innovation:

- Qtum uses efficient and secure MPoS consensus. As compared to Proof-of-Work (PoW) that is widely adopted by other blockchain technologies, MPoS consumes less energy and has no requirements of high-end hardware. MPoS allows any coin holder to be able to stake the coin without wasting large quantities of electricity by staking them in their wallet. More importantly, MPoS can provide a more secure consensus and subsequently raise the cost of cyber attacking, by adjusting the height of block rewards and the allocation of transaction fees.
- Qtum combines the strengths of both Bitcoin and Ethereum, making it more stable in terms of code structure. In addition, its adaptability towards third-party applications gives it an additional advantage over other blockchain technologies.

- Qtum extends the UTXO technology of Bitcoin and enhances the scalability of its network. It supports technologies such as Simple Payment Verification (SPV) and Lightning Network, as well as smart contracts that utilizes EVM virtual machines. Qtum designed and implemented Account Abstract Layer (AAL) technology, realizing the conversion of UTXO model and EVM smart contracts account model. Developers can use EVM to develop smart contracts without having to provide much attention to the details of conversion of UTXO model.

- Qtum invented Decentralized Governance Protocol (DGP). Through the smart contracts embedded in the genesis block, DGP is able to govern the blockchain network and achieve autonomous distributed processing. This allows for faster updating of the network. The current changeable parameters that Qtum supports include: Block size, Gas limit, Gas dispatch and lowest Gas price.

- Qtum is currently researching high-performance virtual machine of new infrastructure. The innovative X86 virtual machine will tackle some problems existing in Ethereum EVM, for example, the lack of support for standard libraries and floating points, byte code of excessive size and etc. Also, it will focus on building an efficient smart contracts system built upon the UTXO model.

Qtum is an open source project, see https://Qtum.org for more information.

Qtum SpaceChain System library layer includes:

- Open source software library support, including basic library libboost, libdb, libsnappy, libcrypto+, etc

- Library provides services to the blockchain application layer through standard interfaces such as Posix and BSD sockets

- System library software is completely open source

- Operating system layer includes SylixOS kernel, hardware driver and standard interface support, such as POSIX/BSD Socket/IO

3.2 SpaceChain Application Layer: Possibilities of Distributed Applications (DApps)

The SpaceChain application layer presents many blockchain use cases. For example, a cloud computing application using backup nodes for data recovery of the most important encrypted data. The cryptographic encrypted data is secured on the satellite itself. In this case, the satellite is a first class actor where the satellite decrypts data payload. This makes the data extremely secure.

In a “trusted execution environment,” SpaceChain provides software code and data that is digitally signed on earth and uploaded to the satellite. Before executing the program, the satellite checks digital signatures prior to adding anything in the application sandbox. This system provides authentication and blockchain capability. For developers and businesses, this allows a “fail-fast” make-a-change-and-try-again approach or rapid iteration in contrast to the old world approach of launching a satellite per application.

SpaceChain is part of the new space trend of space commercialization. In the old-world model, there were only large governments deploying large satellites in space, large rockets that costs billions of dollars to construct and government-led /government-funded launches. All these provided very little opportunity for private space companies to form and offer these services at a competitive cost. In the new model, led in part by China, SpaceChain has a new space race where commercial companies from China, the U.S., Russia, EU are competing to commercialize low earth orbit, driving the development of space technology. This is creating new markets and bringing new funding into the space industry, creating possibilities for new economic models instead of one dominated by few owners and operators. Decentralization keeps power distributed and access open for everyone.

3.3 How the SpaceChain Token (SPC) Works on SpaceChain OS

In the SpaceChain economic model, the SPC token will connect to the SpaceChain OS and allow developers to upload apps onto the SpaceChain network, thus storing data and executing programs on SpaceChain satellites. SpaceChain tokens must be bought in order to execute SpaceChain apps. The SPC token functions as a pure utility token, much like a ticket to use a SpaceChain app for a duration of time or to store one megabyte on a satellite.

SpaceChain is building a decentralized marketplace for space applications built upon the SpaceChain OS which will be valued in SPC tokens. Note that the popularity of an application will increase the demand as well as the value proposition, and thus more SPC tokens will be needed to access the application.

This new economic model fueled SpaceChain to develop an evolved space application model catalyzed by a broad vision of developing an inner space application and communication network. In the community-based space platform model, SpaceChain wired the solar system for networking, within time, other participants can contribute to the satellite constellation around the moon as well as remote data centers surrounding planets and other celestial bodies. These constellations communicate with each other and form a backup. This enables human and robotic settlement in space.

3.4 Community Evolution of Collaboration in Space Exploration

SpaceChain-SVC is based on a whole-of-humankind space exploration paradigm. The vision of SpaceChain is to find a mechanism in the field of space exploration that can effectively mobilize the power of all humankind to persevere in the face of great challenges.

SpaceChain aims to solve the following three problems:

I. International space cooperation is relatively restricted and there is an urgent need in the aeronautical field for a space cooperation alliance that is open and democratic.

II. The aerospace industry is currently closed to the public, and space exploration does not harness the strength of all fields.

III. The current space project has not found a balance between government and commercial enterprise.

At present, international space cooperation is relatively restricted. Security is the greatest barrier to cooperation among most countries. The other is the question of interests, which is the tension between commercial companies and state-owned companies. Therefore, the establishment of a cross-border, safe space security alliance that can protect the interests of participants in the field of aerospace will be the key to promoting deep cooperation in the field of space.

To establish this alliance, a collaborative mechanism must be established with other companies and blockchains. The mission of SpaceChain is to break through the existing internal barriers of the aerospace industry by establishing such collaborative mechanisms and giving them full play to existing capabilities and enable optimal integration of available resources. SpaceChain aims to reach a consensus on security and common interests.

For this purpose, SpaceChain developed SpaceChain OS, an operating system designed to create a true network in space. SpaceChain OS uses blockchain technology to encrypt the transmitted information to ensure the absolute security of this transmission, while utilizing blockchain technology in the operating system and sandbox management so that each satellite can run safely. While achieving its security, SpaceChain OS hardware adaptability is enhanced to meet the varying needs of various spacecrafts, and its compatibility with different spacecrafts such as satellite systems, communications, navigation and remote sensing, satellite ground systems, space stations, spacecrafts, space probes and other applications, help achieve a seamless network.

In addition to international cooperation, the aerospace industry should not remain closed to the general public. Aerospace has always been a mysterious and opaque industry with a high barrier to entry because of its small market, high cost and small number of qualified personnel. However, as we have mentioned, the move towards space is a whole-of-humankind endeavor. It cannot be accomplished solely in the aerospace industry and requires widespread collaboration.

There is a need to explore a model that will allow more individuals and companies in other industries to take part in human space exploration. Today, the 5G era in mobile data has brought about a thriving development in the satellite communications industry. The aerospace market has been growing. The mission of the SpaceChain Foundation is to solve the remaining two problems of high cost and limited qualified personnel so that more people can be a part of a global endeavor to explore space.

Data and research show that the effective way to reduce the cost of satellite applications is to increase the number of applications per satellite. Just as the mobile phone has evolved from a Nokia smartphone to a smart phone of today, the shift is based on a strong and stable space operating system that can hold numerous applications seamlessly.

- SpaceChain OS is the operating system that can solve this problem. Developers can develop satellite applications based on the software development environment provided by SpaceChain OS and upload the program code to the satellite via terrestrial data transfer stations in a simplistic and efficient manner.
- SpaceChain OS can therefore greatly reduce the cost of space applications. Reducing access barriers in the aerospace field and upgrading the average airspace technology are the most important ways to solve the problem of limited space personnel.
- SpaceChain OS has lifted the barriers to use space and satellite-based technologies through simplifying the process of space app development. Simultaneously, the SpaceChain Trust will popularize the foundation of aerospace technology in higher education and encourage the potential talent pool pursuing a space exploration career.

On the basis of the collaboration mechanism, if the journey of humankind exploring space is to be sustained and the cognitive boundary of humankind is to expand continuously, it is imperative to stimulate the power of a free society. This requires a more open and cooperative commercial space socioeconomic and technological development model. Most current space projects cover both the government and commercial sectors. The funds and policies of the government-led space projects will be guaranteed, while simultaneously being constrained by budget and inefficiency, and thus may become hijacked by powerful interest groups.

In contrast, purely commercial space projects focus on economics, but regrettably, it is very difficult for space projects to make profits in space using conventional models. Therefore, the issue of broad-based participation in the construction of space projects needs to be solved. The mission of SpaceChain is to solve the above problems. Therefore, SpaceChain has established a socioeconomic model to explore a strong collaborative and win-win initiative within the aerospace field that can support a global collaborative and sustainable commercial space program.

The new commercial space model is already being realized by billionaires who have invested in mega-rocket and orbit giant constellations to colonize space and its potential. The SpaceChain Foundation uses the community incentive model for the ecological chain, production chain and distribution chain of aerospace wealth. SpaceChain has built strategic partnerships with organizations pursuing this same approach. SpaceChain will also participate in the human space exploration, while extending human cognitive boundaries indefinitely.

3.5 SpaceChain Ecosystem Build-up

Blockchain enables new and open economic models that form new businesses, especially new space-based business.

SpaceChain OS is similar to a mobile application store where you can pay a sum of currency and access a space app. This system is much more affordable than 10 years ago when you needed to buy and operate an entire satellite. Now a few cryptocurrency units can initiate development and place an application on a satellite; this enables the creation of entirely new markets that were not once possible.

Before blockchain and cryptocurrencies, a large sum of capital was necessary to operate a large satellite. SpaceChain has already deployed an application platform based in space, which has been fully tested, and has successfully launched a satellite in early 2018 to achieve the base layer of this new structure. Due to the SpaceChain system cost being 100x of investment versus 1,000x with the old satellite launch mode, the economics enables many new use cases. The most important use case are the ones we have yet to conceive. Comparing the Internet's earliest iteration, few people could predict global apps that would provide options for ride sharing. App stores and the creativity and ingenuity of developers allowed ride shares as a viable business model that disrupted transportation. SpaceChain OS provides new forms of creativity and innovation that were once unfathomable to be developed upon in unpredictable and unimaginable ways. With SpaceChain OS, the possibilities are limitless.

Another opportunity is SpaceChain's ability to bring an open-source software model to space. Imagine a physically untouchable data center in space with a higher level of security because the data center cannot be accessed on Earth. Physical remoteness is attractive to security-conscious customers. With a non-terrestrial network, we have a better diversity of nodes such as Internet nodes, blockchain nodes and other application nodes. Remote nodes operating in space provides network redundancy, satellite backup, and autonomy of data and software.

For example, autonomous software and software automation could allow users to communicate with sensors operating in the ocean that would advance climate change research. In addition, satellites can be used as Internet repeaters and remote sensors for telecommunications that enable the tracking of planes and ships around the globe -- all powered on blockchain.

According to the Satellite Industry Association's annual report "State of the Satellite Industry", the worldwide satellite industry generated $261 billion in revenue in 2016, up from $255 billion in 2015. This is a 2 percent growth increase. Imagine the growth when this wealth can be redistributed to developers on a mesh network of a constellation of satellites. There are currently only six companies in the "large satellite" and 16 in the "small satellite" observation categories. With SpaceChain OS, satellite capabilities improve and this sector can flourish alongside communication, data storage and collection capabilities, with an influx of new companies and partnerships.

3.6 Incubator & Commercial Opportunities

The SpaceChain Foundation has launched an open source hardware development board and a development tutorial that runs SpaceChain OS, promoting it freely in colleges and universities all around the world to increase the number of space personnel produced by the education sector. The increase of the number of talents will greatly enhance the vitality of the industry and provide a continuous momentum of development for space exploration.

SpaceChain Foundation has been supporting startups in the space industry around the world:

- SpaceChain OSRZ Capital, an institutional investment firm.
- Beijing Jiu Zhou Yun Jian, a startup specialized in liquid rocket engine, is collaborating with SpaceChain on an engine smart control system.

3.7 Token Distribution

- Team & Future Talent Acquisition
- Building the Space & Blockchain Ecosystem
- Key Partners & Resources
- Future Reserves
- Distributed to the Community

(the majority of the tokens were distributed via the presale, while some of the tokens were airdropped on EXX.com and via community events)

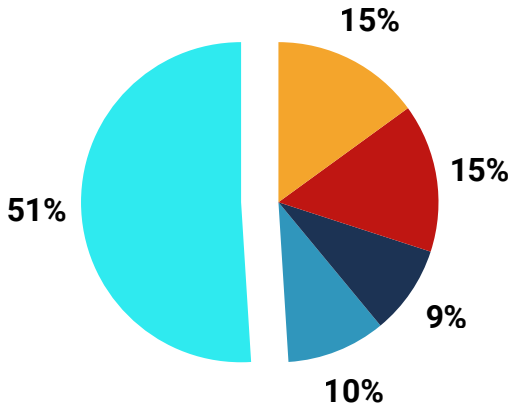

Summary

In short, SpaceChain focuses on the following three goals:

I. Lift barriers to cooperation and integrate existing space resources so that space can better serve the earth and serve humankind.

II. Lower the industry access threshold and costs, vigorously develop education and get more individuals involved in space exploration.

III. Establish a socioeconomic model to support a sustainable and decentralized commercial space with distributed programs that will continuously expand knowledge as well as the cognitive boundaries of humanity.

Partners and Advisors

Partners

ACOINFO

Acoinfo is the inventor of the SylixOS real-time operating system. It provides clients with the professional hardware and software integrated solutions, guarantees real-time, and offers reliable information security for customers. It also shortens product development cycle and reduces the product development cost. Acoinfo co-developed SpaceChain OS based on SylixOS.

Arch Mission

The Arch Mission exists to help humanity fulfill its purpose in the universe by preserving and transmitting our most important knowledge to the stars, via specialized archive devices called “Archs” that are designed to spread and persist across vast distances of space and time.

Beijing Xihua Technology

They will be SpaceChain’s partner on the reusable launch system, which will allow space exploration and commercial space utilization to be more cost efficient.

Draper University

Draper University is Silicon Valley’s leading enterpreneurship program for buildling founders. Draper University is also known for its unconventional methods of teaching business and entrepreneurshi through real-world scenarios and providing acess to top venture investors.

Kubos

A leading software devceloper from the U.S, they will support SpaceChain OS on system optimization and application development.

NanoRacks

A leading product and service provider for the commercial utilization of space. NanoRacks hosts a CubeSat Deployer and equipment for experiments on the International Space Station (ISS). They will join the efforts of exploring the application of SpaceChain OS on commercial international space station.

Nexus

Nexus is an innovative open-source blockchain technology and digital currency designed to improve the world through advanced peer-to-peer networks. Nexus focuses on solving the current challenges of speed and scalability in the blockchain industry and provides world-class quantum resistance through its many innovations.

Open Cosmos

Open Cosmos assists satellite projects in the end-to-end strategic planning of space missions. They help projects to develop, assemble and test their satellite, as well as handle all administrative matters related to the satellite launch and deployment. They also manage all mission operations thereafter, including collection, processing and analysis of data.

Qtum

Qtum Foundation ("Qtum") is China's largest blockchain open source platform. Qtum enables the creation of decentralized applications, executable on mobile devices and compatible with major existing blockchain ecosystems. Qtum combines a modified Bitcoin Core Infrastructure with an inter compatible version of the Ethereum protocol Virtual Machine, and the reliability of Bitcoin's unfailing blockchain with the possibilities provided by smart contracts.

Satellite Applications Catapult

Based in Harwell, Oxfordshire, Satellite Applications Catapult is an independent innovation and technology company that was created by Innovate UK to drive economic growth through the exploitation of space. The not-for-profit research organization works with businesses of all sizes to realize their potential from space infrastructure and its applications.

SpaceBelt

Cloud Constellation Corporation's SpaceBelt is a patented, high-speed global cloud storage network of space-based data centers, each seamlessly interconnected together to provide exclusive and secure cloud infrastructure to service providers, enterprises and governments around the world.

SpacePharma

Israeli aerospace company SpacePharma provides its customers with end-to-end microgravity testing services for research through satellite. Biological and chemical experiments conducted in microgravity can help scientists in multiple fields including vaccine development, virus research and agricultural innovation.

SylixOS

SylixOS is an embedded real-time operating system. It is primarily utilized in aerospace, military and industrial automation areas.

Affiliations

Blockchain Research Institute

The Blockchain Research Institute is conducting the definitive study of the impact of blockchain technology on business, government and society. Their multi-million dollar research program features over 70 projects dedicated to exploring, understanding, documenting and informing leaders about blockchain strategies, market opportunities and implementation challenges.

Chamber of Digital Commerce

The Chamber of Digital Commerce is the world's largest trade association representing the digital asset and blockchain industry. SpaceChain is collaborating with the Chamber membership and participating in activities to promote blockchain-enabled technologies.

Enterprise Etherum Alliance

Enterprise Ethereum Alliance (EEA) is the world's largest open-source blockchain initiative with over 250-member companies. The EEA is helping to evolve Ethereum into an enterprise-grade technology, providing research and development in a range of areas including privacy, confidentiality, scalability and security.

Executive Team

ZEE ZHENG | Co-Founder & Chief Executive Officer

An early adopter in Bitcoin and blockchain, Zee Zheng believes that the combination of space and blockchain technologies will broaden the frontier of our future economy, making seamless global collaboration possible. Prior to SpaceChain, he founded an education startup and ran it 4½ years until it was acquired. Zee Zheng has worked at Hilton, Cathay Pacific, Swire group, YongAn Brokers and a hedge fund, and is the founding partner at HQ Capital, a VC that focuses on investing disruptive technology. He is a Columbia University graduate and Draper University alumnus.

JEFF GARZIK | Co-Founder & Chief Technology Officer

Key Bitcoin Core Developer who worked directly under Satoshi Nakamoto for 2 years. His work can be found in every bitcoin and miner. He is a Key Linux Kernel Engineer on the Linux Foundation Board of Directors and worked directly under Linus Torvalds for over 15 years. His code can be found in every Android phone, and every data center. He is also the Leader of the Ethernet networking subsystem, and Co-Founder & CEO of Bloq.

ERIC DESATNIK | Chief Marketing Officer

Named to the list of “The best public-relations people in the tech industry” by Business Insider, Eric Desatnik currently runs Synaptic Public Relations, advising clients on communications and public relations strategies, focused on science, technology and media. He recently led Global Communications at XPRIZE, the leading non-profit organization that manages high-profile competitions to encourage technological breakthroughs to benefit humanity. He holds degrees from Yale University and Ohio University, and is on the advisory boards for WildAid and SXSW Eco.

NICK TRUDGEN | Chief Commercial Officer, SpaceChain UK Director

A native of UK, Nick Trudgen speaks fluent mandarin and specializes in UK-China bilateral trade and investment, with a focus on space, satellite and telecommunications. He is also a research fellow at the CNSA China Institute of Space Law in Beijing and the founder of the Space Group at Beijing DHH Law Firm (Deheng). He is also a fellow at the China Policy Institute at the University of Nottingham and the Chief Investment Officer of the leading UK-China investment fund, China New Finance, based in Hong Kong.

Advisors

DON TAPSCOTT | Advisor

Don Tapscott is ranked the 2nd most influential management thinker in the world by Thinkers50. He has been advancing groundbreaking concepts for over three decades. His most recent book was co-authored with his son, Alex Tapscott. Blockchain Revolution: How the Technology Underlying Bitcoin is Changing Business, Money and the World was published in May 2016 and is, according to Harvard Business School's Clay Christensen, "the book, literally, on how to survive and thrive in this next wave of technology-driven disruption." In 2017, Don and Alex co-founded the Blockchain Research Institute, whose 70+ projects are the definitive investigation into blockchain strategy, use-cases, implementation challenges and organizational transformations.

TIM DRAPER | Advisor

Co-founder of DFJ venture capital, and renowned VC capitalist from Silicon Valley. He invested in numerous popular companies including SpaceX, Tesla, Theranos, and Thumbtack. Prior to these, he also invested in Baidu, Hotmail, and Skype. He founded Draper University in Silicon Valley to cultivate entrepreneurship talents.

JEFFREY MANBER | Core Space Advisor

CEO of NanoRacks, from 2009, Manber has steered the growth of the first company to own and market its own hardware and services on board the International Space Station. Manber has been involved in several key breakthrough commercial space projects, principally those around the commercialization of space assets as well as the integration of the Russian space industry into major space programs, including the International Space Station. Manber was with the Russian space corporation, RSC Energia, during their privatization period of the 1990s. Jeffrey Manber is regarded as one of the pioneering commercial space entrepreneurs.

MATTHEW ROSZAK | Core Strategy Advisor

Co-founder and chairman of Bloq, Mr. Roszak is also the founding partner of Tally Capital, a private investment firm focused on blockchain-enabled technology with a portfolio of over 20 investments.

Mr. Roszak is a blockchain investor, entrepreneur and advocate. Mr. Roszak is a sought after thought leader on blockchain technology and has testified before US Congress and spoken at The Brookings Institution. Mr. Roszak has been featured on CNBC and quoted in The Wall Street Journal, Bloomberg, CoinDesk and Bitcoin Magazine. In addition, Mr. Roszak has presented at FinTech conferences worldwide, including Money20/20, CES and American Banker.

ERIC ANDERSON | Advisor

Eric Anderson is a well-known aerospace engineer and entrepreneur who pioneered the development of the space tourism industry. Since 2001, he has successfully arranged eight missions to the International Space Station (ISS) for privately-funded individuals. Eric co-founded several organizations including Space Angels Network, Planetary Resources and Space Adventures, the only company to have provided commercial human spaceflight missions to the ISS.

RYAN XU | Co-founder of Blockchain Global and ACX:

Ryan is a well-known Chinese venture capitalist who has extensive experience in Financial technology. Ryan was the co-founder of Blockchain Global, a blockchain- focused enterprise that provides cloud data services and incubates blockchain-related startups. He is also the co-founder of ACX, an Australian- based digital currency exchange. He was named one of the blockchain leaders in 2016.

XIAHONG LIN | Founder of Bodhi Project

Xiahong is an entrepreneur and software engineer. In 2014, Xiahong began experimenting with Ethereum protocol smart contracts and now is working to build a decentralized prediction market on Qtum. Previously Xiahong worked as a software engineer at Edmodo, Twitter and Tencent. He has a Master of Science Degree from Purdue University where he specialized in Statistical Machine Learning, and Master of Science Degree in Computer Science from Shanghai Jiao Tong University where he specialized in Cryptography.

GONG MING | Founder of ICOAGE & ChainB.com

Gong Ming is widely known by his online nickname “Bao Zou Prince Gong”. He was actively engaged in China’s digital currency and blockchain technology development from the beginning and is a highly reputable opinion leader in the industry. Gong Ming founded the most positively recognized blockchain news media “ChainB.com” in China and the reputable ICO platform, ICOAGE.

DUAN XINXING | Co-founder of Bytom and Executive President of Babbitt

Duan is winner of the Gates Foundation Scholarship, former senior engineer of Lucent Bell Labs, and vice president of the world's largest Bitcoin Exchange OKCoin (coin exchange). He has led R&D and operations in OKLink, Bytom and many other blockchain products.

TOKEN TANG | Founder & CEO of Ziggurat Tech

Token is President of Ink Labs Foundation; Managing Partner of Jenga Blockchain Capital; initiator of Blockchain Technology and Law Innovation Research Lab of Xi'an Jiaotong University; member of the advisory committee of APEC Future College; and senior member of Silk Road Innovative Design Alliance.

PARKER HONG | Partner of HQ Capital

Parker is vice president and member of the voting committee of the industry guidance fund of SDIC Hi-Tech. He worked at Iris Capital Canada and the European telecom giant Orange and Publicis VC.

STEVEN LI | Partner of HQ Capital

Steven is Vice President of a Strategic Investment of a large Internet company. He led more than twenty Internet project investments from angel to B round. He won the Ontario Youth Entrepreneurship Award, is a member of the DEMO + incubator jury, and official alumni representative for the University of Toronto in China. He has a Bachelor of Science in Economics and Management with the University of Toronto, and a Master of Finance with Queen's University.

SPACECHAIN

COMMUNITY-BASED
SPACE PLATFORM

For future announcements, do visit:
spacechain.com/updates